HE7110

1A Bipolar Linear Regulator

Features

- Maximum output current is 1.1A
- Range of operation input voltage: Max 30V
- Line regulation: 0.03%/V (typ.)
- Standby current: 1.8mA (typ.)
- Load regulation: 0.2%/A (typ.)
- Environment Temperature: -20℃~85℃

Applications

- Power Management for Computer Mother Board, Graphic Card
- LCD Monitor and LCD TV
- DVD Decode Board
- ADSL Modem
- Post Regulators For Switching Supplies

General Description

HE7110 is a series of low dropout three-terminal regulators with a dropout of 1.3V at 1A load current.HE7110 features a very low standby current 1.8mA compared to 5mA of competitor.

Other than a fixed version, Vout = 1.2V, 1.8V, 2.5V, 2.85V, 3.3V, and 5V, HE7110 has an adjustable version, which can provide an output voltage from 1.25 to 12V with only two external resistors.

HE7110 offers thermal shut down function, to assure the stability of chip and power system. And it uses trimming technique to guarantee output voltage accuracy within 2%. Other output voltage accuracy can be customized on demand, such as 1%.

HE7110 is available in SOT89 power package.

Typical Application

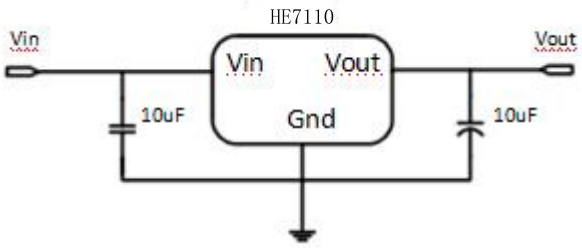

Application circuit of HE7110 fixed version

Typical Electrical Characteristic

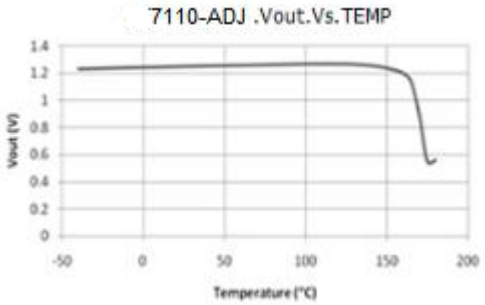

Selection Table

Marking	Part No.	Output Voltage	Package
7110 XX YYWW	XX=12	1.2V	SOT89
	XX=18	1.8V	
	XX=28	2.85V	
	XX=25	2.5V	
	XX=33	3.3V	
	XX=50	5.0V	
	XX=AD	Adj	

Ordering Information

Marking	Designator	Description
7110 XX YYWW	7110	Product code
	XX	Output Voltage(1.2~12.0V)
	YYWW	DATE CODE

Note:"XX" stands for output voltages. Other voltages can be specially customized

Parameters	Description
Temperature & Rohs	C:-40~85℃ ,Pb Free Rohs Std.
Package type	P:SOT-89
Packing type:	TR: Tape & Reel (Standard)
Voltage accuracy	2%(Customized)

Block Diagram

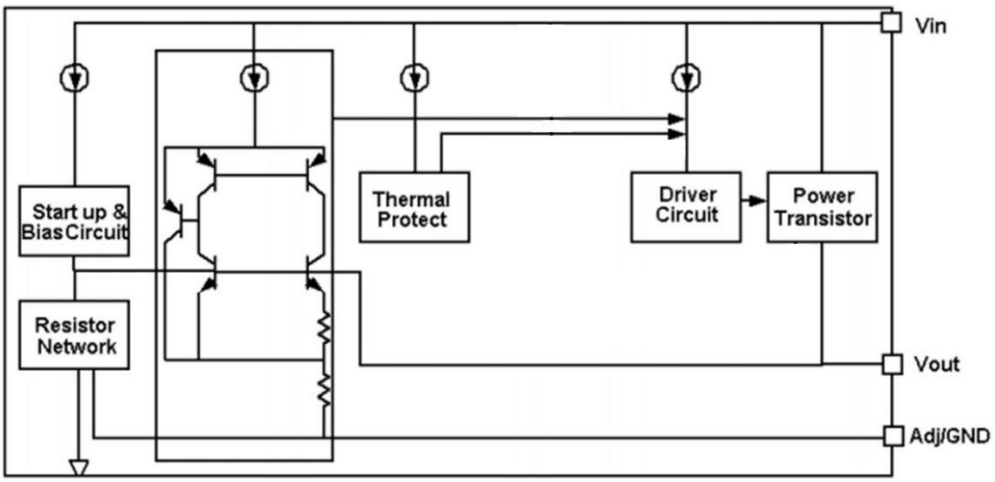

Pin Configuration

SOT89 (Top view)

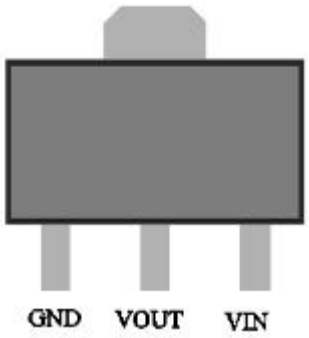

Absolute Maximum Ratings

Max Input Voltage 30V
Max Operating Junction Temperature(Tj) ..... 150℃
Ambient Temperature(Ta) ..... -40℃~ 85℃
Storage Temperature(Ts) ..... -40℃~150℃
Lead Temperature & Time ..... 260℃ 10S

Caution: Exceed these limits to damage to the device. Exposure to absolute maximum rating conditions may affect device reliability.

Recommended Work Conditions

Recommended maximum input voltage 30V
Recommended operating junction temperature(Tj) ..... -20~125℃

Thermal Information

Symbol	Parameter	Package	Max.	Unit
θ_{JA}	Thermal Resistance (Junction to Ambient) (Assume no ambient airflow, no heat sink)	SOT89	200	℃/W
P_D	Power Dissipation	SOT89	0.50	W

Electrical Characteristics

TA=25℃, unless otherwise noted.

Symbol	Parameter	Conditions	Min	Typ	Max	Unit
Vref	Reference voltage	HE7110-Adj 10mA≤Iout≤1A , Vin=3.25V	1.225	1.25	1.275	V
Vout	Output voltage	HE7110-1.2V 0≤Iout≤1A , Vin=3.2V	1.176	1.2	1.224	V
		HE7110-1.8V 0≤Iout≤1A , Vin=3.8V	1.764	1.8	1.836	V
		HE7110-2.5V 0≤Iout≤1A , Vin=4.5V	2.45	2.5	2.55	V
		HE7110-2.85V 0≤Iout≤1A , Vin=4.85V	2.793	2.85	2.907	V
		HE7110-3.3V 0≤Iout≤1A , Vin=5.3V	3.234	3.3	3.366	V
		HE7110-5.0V 0≤Iout≤1A , Vin=7.0V	4.9	5	5.1	V
△Vout	Line regulation	HE7110-1.2V Iout=10mA, 2.7V≤Vin≤10V		0.03	0.2	%/V
		HE7110-ADJ Iout=10mA, 2.75V≤Vin≤12V		0.03	0.2	%/V
		HE7110-1.8V Iout=10mA, 3.3V≤Vin≤12V		0.03	0.2	%/V
		HE7110-2.5V Iout=10mA, 4.0V≤Vin≤12V		0.03	0.2	%/V
		HE7110-2.85V Iout=10mA, 4.35V≤Vin≤12V		0.03	0.2	%/V
		HE7110-3.3V Iout=10mA, 4.8V≤Vin≤12V		0.03	0.2	%/V
		HE7110-5.0V Iout=10mA, 6.5V≤Vin≤12V		0.03	0.2	%/V
		HE7110-1.2V Vin =2.7V, 10mA≤Iout≤1A		2	8	mV
		HE7110-ADJ Vin =2.75V, 10mA≤Iout≤1A		2	8	mV
		HE7110-1.8V Vin =3.3V, 10mA≤Iout≤1A		3	12	mV

△Vout	Load regulation	HE7110-2.5V Vin =4.0V, 10mA≤Iout≤1A		4	16	mV
		HE7110-2.85V Vin =4.35V, 10mA≤Iout≤1A		5	20	mV
		HE7110-3.3 Vin =4.8V, 10mA≤Iout≤1A		6	24	mV
		HE7110-5.0 Vin =6.5V, 10mA≤Iout≤1A		9	36	mV
Vdrop	Dropout voltage	Iout =100mA		1.15	1.3	V
		Iout=1A		1.3	1.5	V
Imin	Minimum load current	HE7110-ADJ		1.8	10	mA
Iq	Quiescent Current	HE7110-1.2V,Vin=10V		1.8	5	mA
		HE7110-1.8V,Vin=12V		1.8	5	mA
		HE7110-2.5V,Vin=12V		1.8	5	mA
		HE7110-2.85V,Vin=12V		1.8	5	mA
		HE7110-3.3V,Vin=12V		1.8	5	mA
		HE7110-5.0V,Vin=12V		1.8	5	mA
IAdj	Adjust pin current	HE7110-ADJ Vin=5V,10mA≤Iout≤1A		55	120	uA
Ichange	Iadj change	HE7110-ADJ Vin=5V,10mA≤Iout≤1A		0.2	10	uA
ΔV/ΔT	Temperature coefficien			±100		ppm

Note1: All test are conducted under ambient temperature 25°C and within a short period of time 20ms

Note2: Load current smaller than minimum load current of HE7110-ADJ will lead to unstable or oscillation output.

Detailed Description

HE7110 is a series of low dropout voltage, three terminal regulators. Its application circuit is very simple: the fixed version only needs two capacitors and the adjustable version only needs two resistors and two capacitors to work. It is composed of some modules including start-up circuit, bias circuit, bandgap, thermal shutdown, power transistors and its driver circuit and so on.

The thermal shut down modules can assure chip and its application system working safety when the junction temperature is larger than 140°C.

The bandgap module provides stable reference voltage, whose temperature coefficient is compensated by careful design considerations. The temperature coefficient is under 100 ppm/°C. And the accuracy of output voltage is guaranteed by trimming technique.

Typical Application

HE7110 has an adjustable version and six fixed versions (1.2V, 1.8V, 2.5V, 2.85V , 3.3V and 5V) **Fixed Output Voltage Version**

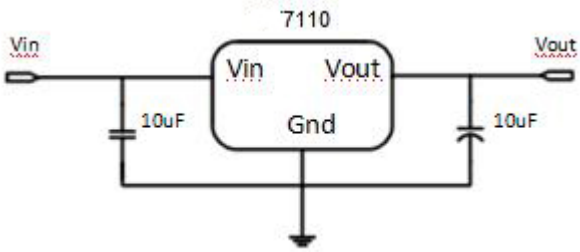

Application circuit of HE7110 fixed version

1) Recommend using 10uF tan capacitor as bypass capacitor (C1) for all application circuit.
2) Recommend using 10uF tan capacitor to assure circuit stability.

Adjustable Output Voltage Version

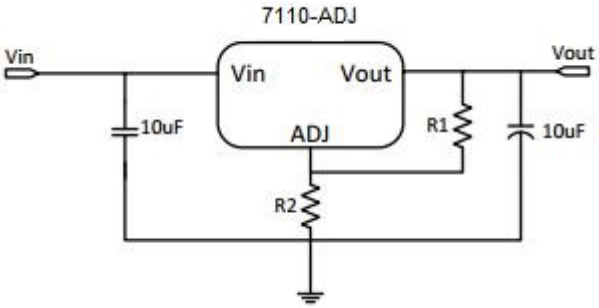

Application Circuit of HE7110-ADJ

The output voltage of adjustable version follows the equation: Vout=1.25×(1+R2/R1)+IAdj×R2. We can ignore IAdj because IAdj (about 50uA) is much less than the current of R1 (about 2~10mA).

1) To meet the minimum load current (>10mA) requirement, R1 is recommended to be 125ohm or lower. As HE7110-ADJ can keep itself stable at load current about 2mA, R1 is not allowed to be higher than 625ohm.

2) Using a bypass capacitor (C_{ADJ}) between the ADJ pin and ground can improve ripple rejection. This bypass capacitor prevents ripple from being amplified as the output voltage is increased. The impedance of C_{ADJ} should be less than R1 to prevent ripple from being amplified. As R1 is normally in the range of 100Ω~500Ω, the value of C_{ADJ} should satisfy this equation: $1/(2\pi \times f_{ripple} \times C_{ADJ}) < R1$.

Thermal Considerations

We have to take heat dissipation into great consideration when output current or differential voltage of input and output voltage is large. Because in such cases, the power dissipation consumed by HE7110 is very large. HE7110 series uses SOT-223 package type and its thermal resistance is about 20°C/W. And the copper area of application board can affect the total thermal resistance. If copper area is 5cm*5cm (two sides), the resistance is about 30°C/W. So the total thermal resistance is about 20°C/W + 30°C/W. We can decrease total thermal resistance by increasing copper area in application board. When there is no good heat dissipation copper are in PCB, the total thermal resistance will be as high as 120°C/W, then the power dissipation of HE7110 could allow on itself is less than 1W. And furthermore, HE7110 will work at junction temperature higher than 125°C under such condition and no lifetime is guaranteed.

Typical Performance Characteristics

T_A=25℃, unless otherwise noted.

Line regulation

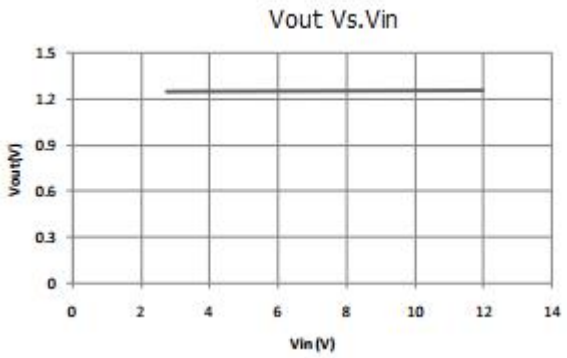

Dropout voltage

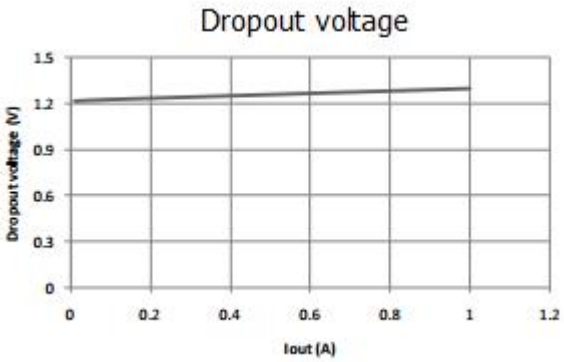

Load regulation

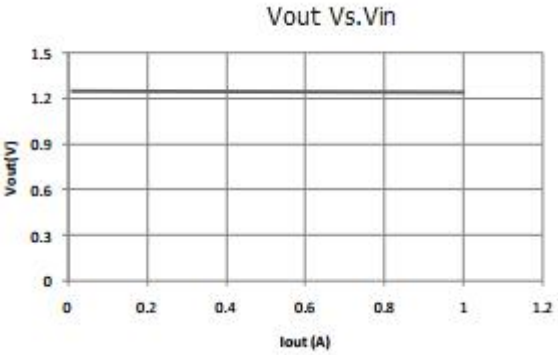

Thermal performance with OTP

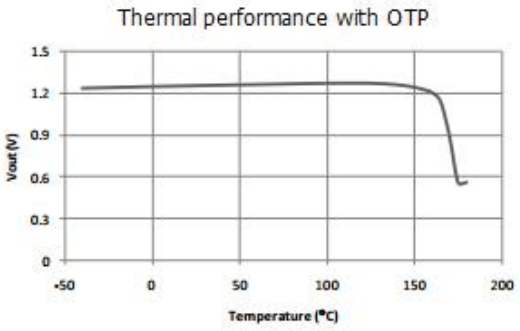

Package Information

3-pin SOT89 Outline Dimensions

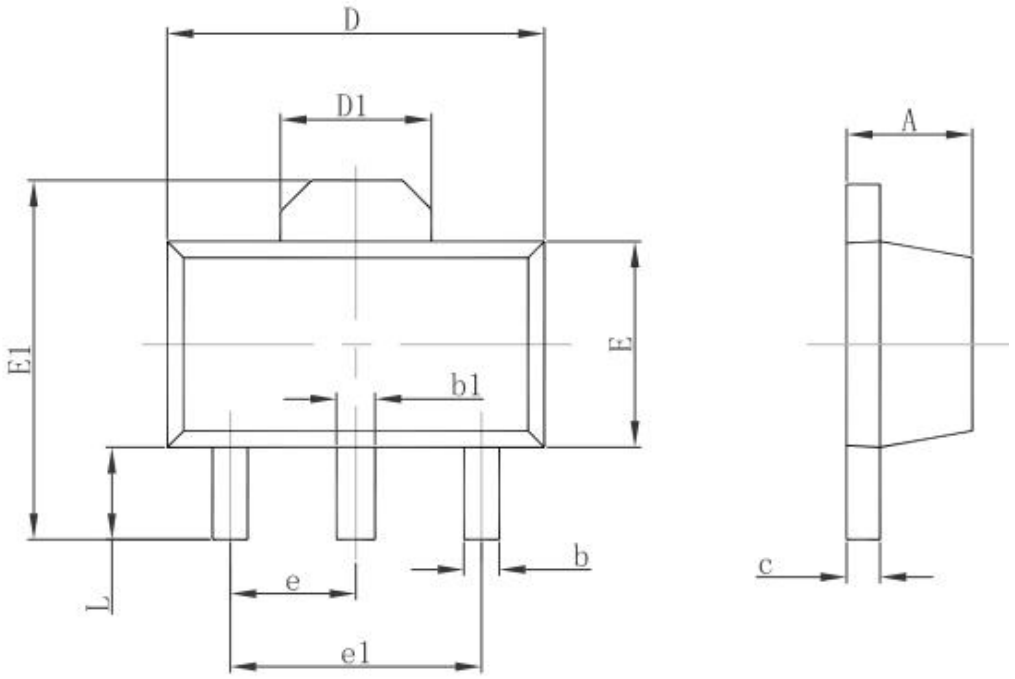

Symbol	Dimensions In Millimeters		Dimensions In Inches	
	Min.	Max.	Min.	Max.
A	1.400	1.600	0.055	0.063
b	0.320	0.520	0.013	0.020
b1	0.400	0.580	0.016	0.023
c	0.350	0.440	0.014	0.017
D	4.400	4.600	0.173	0.181
D1	1.550 REF.		0.061 REF.	
E	2.300	2.600	0.091	0.102
E1	3.940	4.250	0.155	0.167
e	1.500 TYP.		0.060 TYP.	
e1	3.000 TYP.		0.118 TYP.	
L	0.900	1.200	0.035	0.047